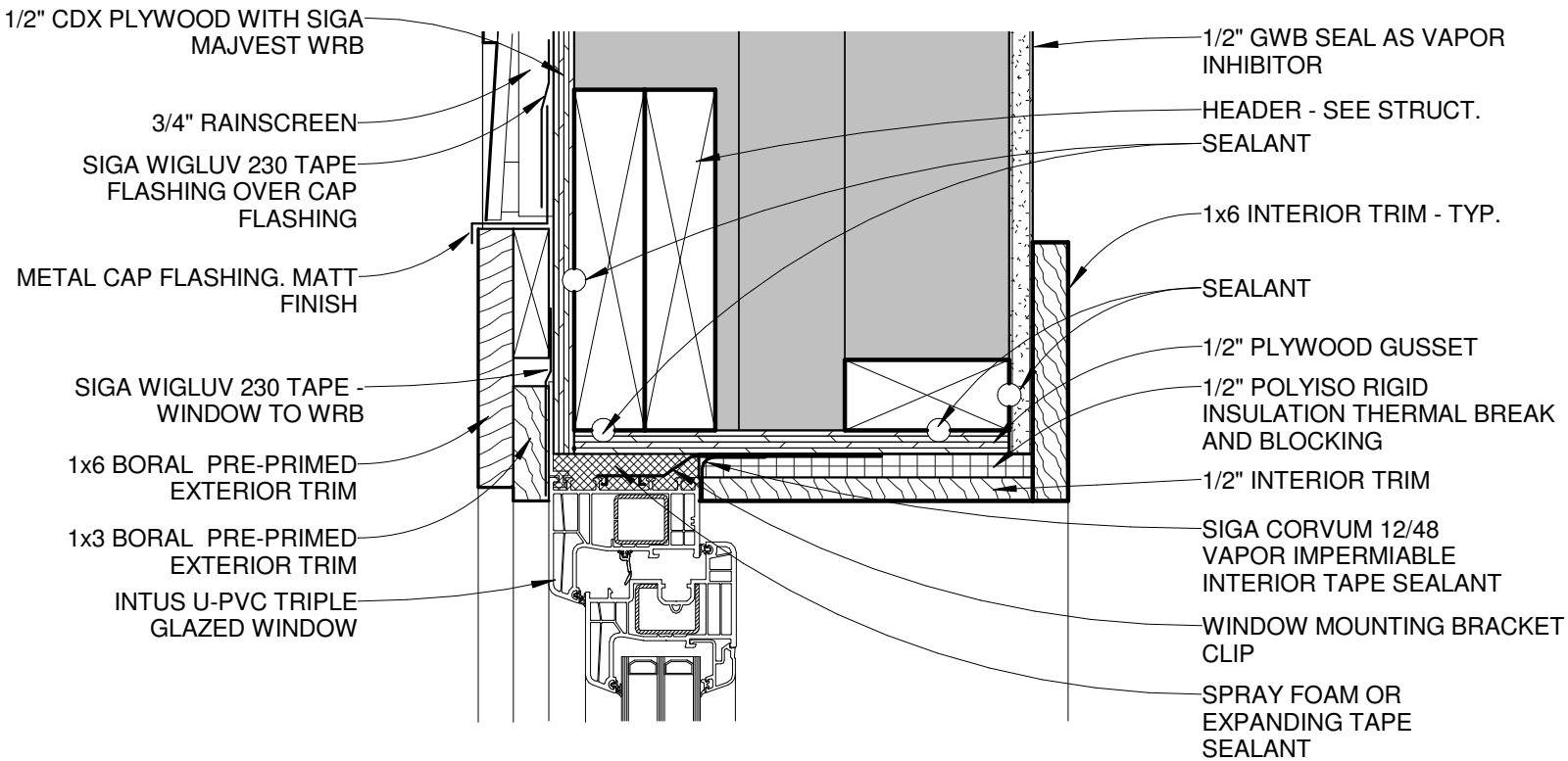

1 MGBS WINDOW HEAD DETAIL
3" = 1'-0"

BRIBURN
architecture for life

MAINE GREEN BUILDING SUPPLY

HEAD DETAIL IN DOUBLE STUD WALL

3" = 1'-0"

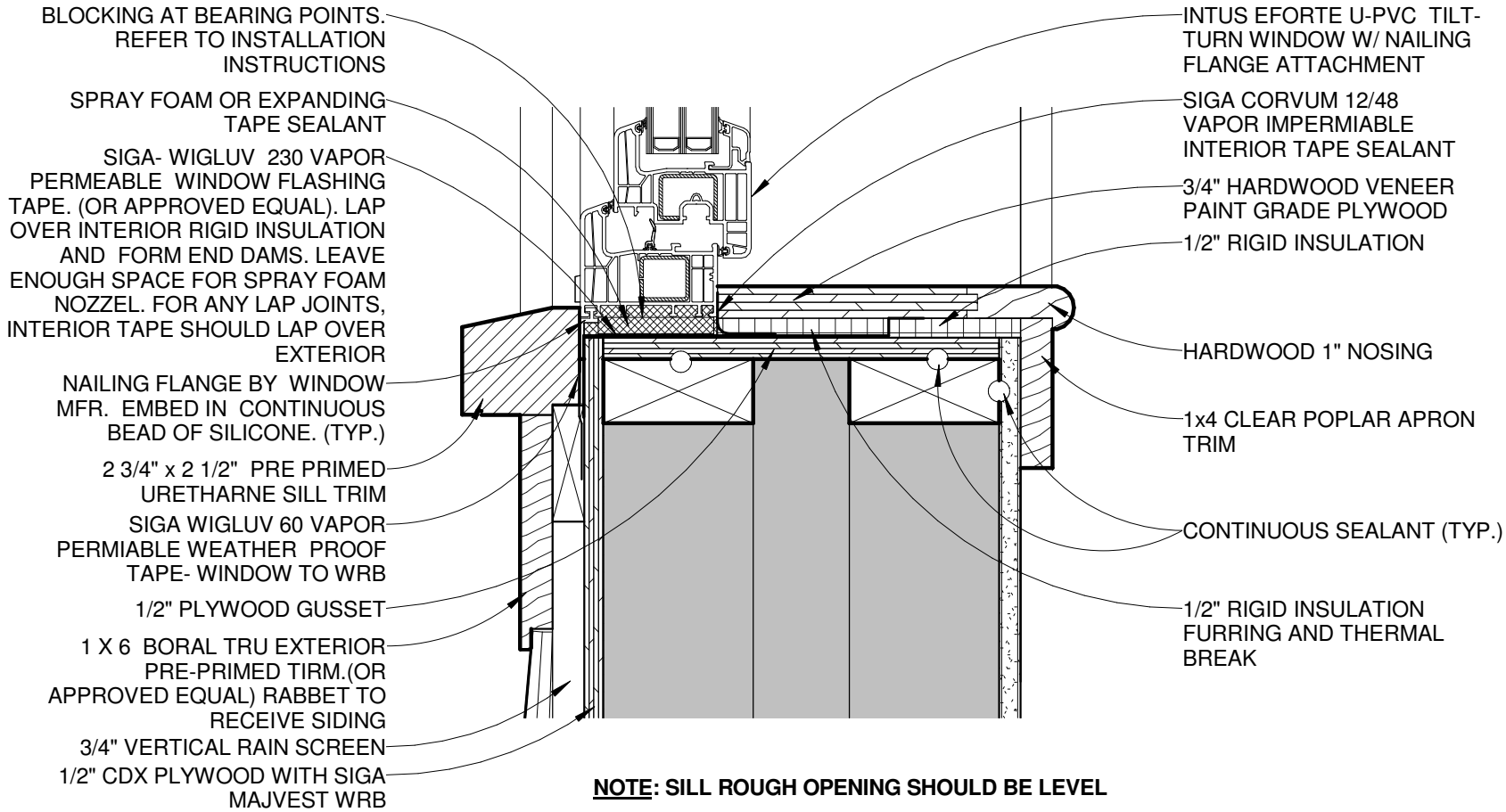

NOTE: SILL ROUGH OPENING SHOULD BE LEVEL

1 MGBS WINDOW SILL DETAIL
3" = 1'-0"

BRIBURN
architecture for life

MAINE GREEN BUILDING SUPPLY

SILL DETAIL IN DOUBLE STUD WALL

3" = 1'-0"