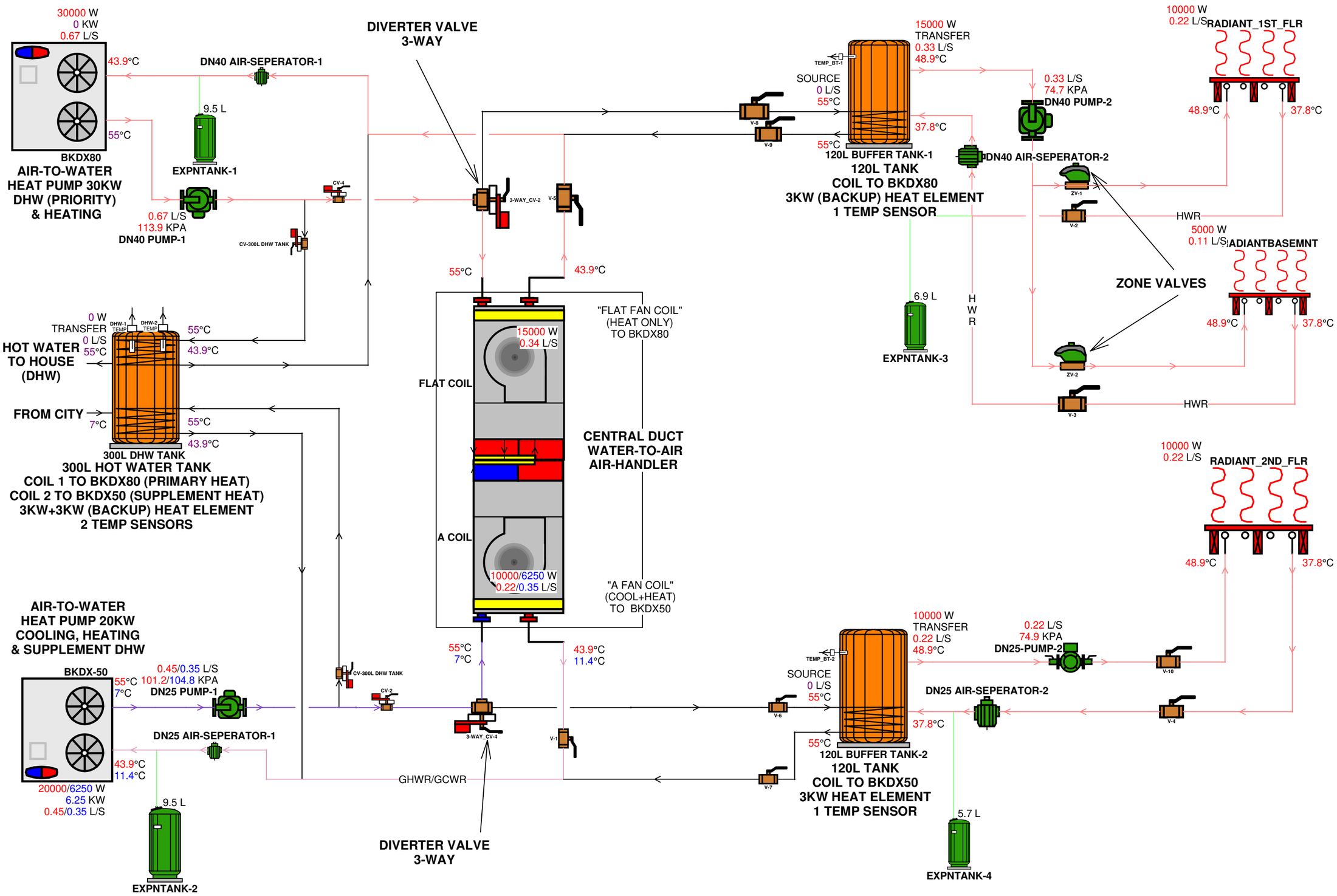
30000 W
0 KW
0.67 L/S
43.9°C
55°C
BKDX80
AIR-TO-WATER
HEAT PUMP 30KW
DHW (PRIORITY)
& HEATING
DN40 AIR-SEPERATOR-1
9.5 L
EXPNTANK-1
0.67 L/S
113.9 KPA
DN40 PUMP-1
CV-4
CV-300L DHW TANK
DIVERTER VALVE
3-WAY
3-WAY_CV-2
V-5
55°C
43.9°C
0 W
TRANSFER
0 L/S
55°C
HOT WATER
TO HOUSE
(DHW)
DHW-1 TEMP
DHW-2 TEMP
55°C
43.9°C
FROM CITY
7°C
55°C
43.9°C
300L DHW TANK
300L HOT WATER TANK
COIL 1 TO BKDX80 (PRIMARY HEAT)
COIL 2 TO BKDX50 (SUPPLEMENT HEAT)
3KW+3KW (BACKUP) HEAT ELEMENT
2 TEMP SENSORS
15000 W
0.34 L/S
FLAT COIL
"FLAT FAN COIL"
(HEAT ONLY)
TO BKDX80
CENTRAL DUCT
WATER-TO-AIR
AIR-HANDLER
A COIL
10000/6250 W
0.22/0.35 L/S
"A FAN COIL"
(COOL+HEAT)
TO BKDX50
AIR-TO-WATER
HEAT PUMP 20KW
COOLING, HEATING
& SUPPLEMENT DHW
BKDX-50
55°C
7°C
0.45/0.35 L/S
101.2/104.8 KPA
DN25 PUMP-1
DN25 AIR-SEPERATOR-1
43.9°C
11.4°C
20000/6250 W
6.25 KW
0.45/0.35 L/S
9.5 L
EXPNTANK-2
CV-300L DHW TANK
CV-2
55°C
7°C
43.9°C
11.4°C
3-WAY_CV-4
V-1
GHWR/GCWR
DIVERTER VALVE
3-WAY
TEMP_BT-1
SOURCE
0 L/S
55°C
V-8
V-9
15000 W
TRANSFER
0.33 L/S
48.9°C
37.8°C
55°C
120L BUFFER TANK-1
120L TANK
COIL TO BKDX80
3KW (BACKUP) HEAT ELEMENT
1 TEMP SENSOR
0.33 L/S
74.7 KPA
DN40 PUMP-2
DN40 AIR-SEPERATOR-2
ZV-1
V-2
HWR
6.9 L
EXPNTANK-3
H
W
R
ZV-2
V-3
HWR
10000 W
0.22 L/S
RADIANT_1ST_FLR
48.9°C
37.8°C
5000 W
0.11 L/S
RADIANTBASEMNT
ZONE VALVES
48.9°C
37.8°C
10000 W
0.22 L/S
RADIANT_2ND_FLR
48.9°C
37.8°C
TEMP_BT-2
SOURCE
0 L/S
55°C
V-6
V-7
10000 W
TRANSFER
0.22 L/S
48.9°C
37.8°C
55°C
120L BUFFER TANK-2
120L TANK
COIL TO BKDX50
3KW HEAT ELEMENT
1 TEMP SENSOR
0.22 L/S
74.9 KPA
DN25-PUMP-2
V-10
DN25 AIR-SEPERATOR-2
V-4
5.7 L
EXPNTANK-4